flexiforce FF
innovations for overhead doors

2G380A35 Curve

Images:

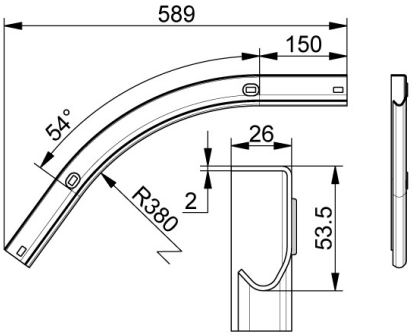

Description:

- Subcategory	: 04. 2G
- IND/RES	: IND
- Full package quantity	: 50
- Unit	: piece (1)
- Weight / Unit	: 1,00kg
- Material	: Galvanised Steel
- Length	: 589mm
- Thickness	: 2mm
- Product Family	: a 023
- Inside diameter	: 380mm
- Track width	: 2"
- Technical description	: Each end is provided with 2 slotted holes 16x9mm. Both ends have a 150mm long straight part